Angled Profile

18X18-ANG-BLKD-AL-SM-2000



DESCRIPTION

DRK's aluminium profiles provide a clean, structured housing for LED tape, with diffuser options that soften the light and help reduce glare. Available in a range of shapes and sizes, they allow lighting to be integrated into architectural features, joinery and display areas for a refined finish.

SPECIFICATIONS

Dimensions	2 metre
Emergency Gear Location	Remote
Housing Material	Aluminium
IP Rating	IP20
DALI Available	No
Dimension 1	2 Metres (L) x 18mm (W) x 18mm (H)
Mounting Type	Surface Mounted | Suspended
LED Lifetime	50,000h

DIMENSIONS

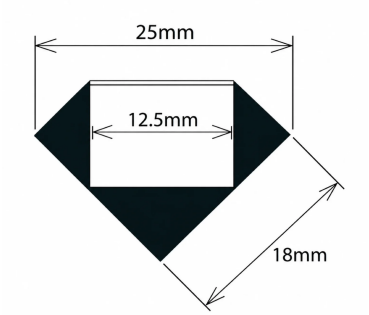

POLAR CURVE

LUMINAIRE FINISHES

Body W / B / S / R - Custom RAL

NOTES

DRK Lighting LTD
Unit 2, Silverglade Business Park,
Leatherhead Road, Chessington,
KT9 2QL

info@drklighting.co.uk
+44 (0)207 018 2202
www.drklighting.co.uk

bsi Certified Remanufacturer KITEMARK™
Citation ISO Certification ISO 9001: 2015 ISO 14001: 2015 REGISTERED
Certificate No:447672024

Warranty	5 years

DRK Lighting LTD
Unit 2, Silverglade Business Park,
Leatherhead Road, Chessington,
KT9 2QL

info@drklighting.co.uk
+44 (0)207 018 2202
www.drklighting.co.uk

bsi Certified Remanufacturer KITEMARK™

Citation ISO Certification
Integrated Management System
ISO 9001: 2015
ISO 14001: 2015
REGISTERED
Certificate No:447672024