# Aralia

ALI-2000-S-SUS



## DESCRIPTION

The ARALIA is a versatile 48V lighting track for surface-mounted or suspended installation. Available in standard lengths of 1m, 1.5m, 2m and 3m, with other lengths available upon request, it offers flexibility for a variety of lighting layouts. With a profile measuring 26.4mm ?? 53mm and an IP20 rating, the ARALIA provides a streamlined track solution for indoor applications.

IP20

DRK Lighting LTD
Unit 2, Silverglade Business Park,
Leatherhead Road, Chessington,
KT9 2QL

info@drklighting.co.uk
+44 (0)207 018 2202
www.drklighting.co.uk

bsi Certified Remanufacturer KITEMARK™
Citation ISO Certification Integrated Management System ISO 9001: 2015 ISO 14001: 2015 REGISTERED
Certificate No:447672024

## SPECIFICATIONS

| | |
|---|---|
| Dimensions | 2 Metre (L) x 26.4mm (W) x 53mm (H) |
| Input Voltage | 48V |
| Housing Material | Aluminium |
| IP Rating | IP20 |
| DALI Available | No |
| Dimension 1 | 1 Metre \| 2 Metre \| 3 Metre |
| Mounting Type | Surface Mounted \| Suspended \| Recessed \| Plaster-In |
| LED Lifetime | 50,000h |
| Warranty | 5 years |

## DIMENSIONS

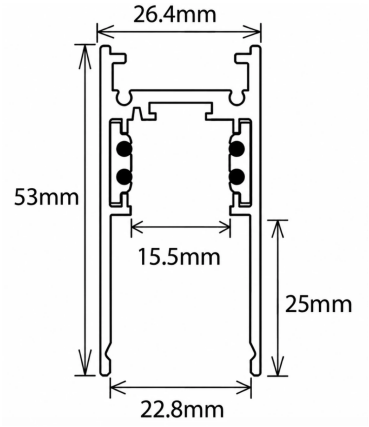


## POLAR CURVE

## LUMINAIRE FINISHES

Body W / B / S / R - Custom RAL

## NOTES

DRK Lighting LTD
Unit 2, Silverglade Business Park,
Leatherhead Road, Chessington,
KT9 2QL

info@drklighting.co.uk
+44 (0)207 018 2202
www.drklighting.co.uk

bsi Certified Remanufacturer KITEMARK™
Citation ISO Certification Integrated Management System ISO 9001: 2015 ISO 14001: 2015 REGISTERED
Certificate No:447672024