# Viola

VIO-3000-W-PI



## DESCRIPTION

The VIOLA is a 48V recessed trimless lighting track, offering a seamless, integrated finish for interior lighting layouts. Available in standard lengths of 1m, 1.5m, 2m and 3m, with other lengths available upon request, it provides flexibility for a variety of installations. With a profile measuring 26.4mm ?? 52.2mm and an IP20 rating, the VIOLA is suitable for indoor applications.

IP20

DRK Lighting LTD
Unit 2, Silverglade Business Park,
Leatherhead Road, Chessington,
KT9 2QL

info@drklighting.co.uk
+44 (0)207 018 2202
www.drklighting.co.uk

Certified Remanufacturer KITEMARK™
Citation ISO Certification
ISO 9001: 2015
ISO 14001: 2015
REGISTERED
Certificate No:447672024

## SPECIFICATIONS

| | |
|---|---|
| Dimensions | 3 Metre (L) x 26.4mm (W) x 52.2mm (H) |
| Input Voltage | 48V |
| Housing Material | Aluminium |
| IP Rating | IP20 |
| DALI Available | No |
| Dimension 1 | 1 Metre \| 2 Metre \| 3 Metre |
| Mounting Type | Surface Mounted \| Suspended \| Recessed \| Plaster-In |
| LED Lifetime | 50,000h |
| Warranty | 5 years |

## DIMENSIONS

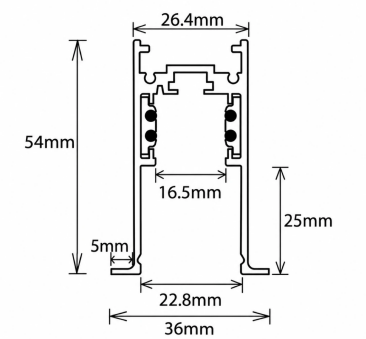


## POLAR CURVE

## LUMINAIRE FINISHES

Body W / B / S / R - Custom RAL

## NOTES

DRK Lighting LTD
Unit 2, Silverglade Business Park,
Leatherhead Road, Chessington,
KT9 2QL

info@drklighting.co.uk
+44 (0)207 018 2202
www.drklighting.co.uk

bsi Certified Remanufacturer KITEMARK™
Citation ISO Certification
Integrated Management System
ISO 9001: 2015
ISO 14001: 2015
REGISTERED
Certificate No:447672024