Viola

VIO-3000-S-PI



DESCRIPTION

The VIOLA is a 48V recessed trimless lighting track, offering a seamless, integrated finish for interior lighting layouts. Available in standard lengths of 1m, 1.5m, 2m and 3m, with other lengths available upon request, it provides flexibility for a variety of installations. With a profile measuring 26.4mm ?? 52.2mm and an IP20 rating, the VIOLA is suitable for indoor applications.

IP20

DRK Lighting LTD
Unit 2, Silverglade Business Park,
Leatherhead Road, Chessington,
KT9 2QL

info@drklighting.co.uk
+44 (0)207 018 2202
www.drklighting.co.uk

Certified Remanufacturer KITEMARK™
Citation ISO Certification
ISO 9001: 2015
ISO 14001: 2015
REGISTERED
Certificate No:447672024

SPECIFICATIONS

Dimensions	3 Metre (L) x 26.4mm (W) x 52.2mm (H)
Input Voltage	48V
Housing Material	Aluminium
IP Rating	IP20
DALI Available	No
Dimension 1	1 Metre | 2 Metre | 3 Metre
Mounting Type	Surface Mounted | Suspended | Recessed | Plaster-In
LED Lifetime	50,000h
Warranty	5 years

DIMENSIONS

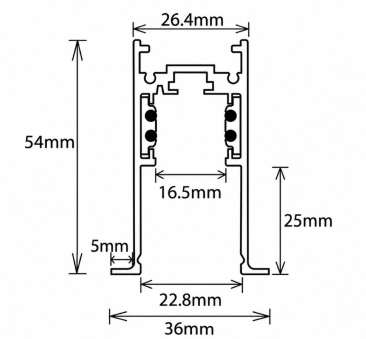

POLAR CURVE

LUMINAIRE FINISHES

Body W / B / S / R - Custom RAL

NOTES

DRK Lighting LTD
Unit 2, Silverglade Business Park,
Leatherhead Road, Chessington,
KT9 2QL

info@drklighting.co.uk
+44 (0)207 018 2202
www.drklighting.co.uk

bsi Certified Remanufacturer KITEMARK™
Citation ISO Certification
Integrated Management System
ISO 9001: 2015
ISO 14001: 2015
REGISTERED
Certificate No:447672024