Scilla

SCI-1000-B-REC



DESCRIPTION

The SCILLA is a 48V recessed aluminium lighting track, offering a streamlined, integrated finish for interior lighting layouts. Available in standard lengths of 1m, 1.5m, 2m and 3m, with other lengths available upon request, it provides flexibility for a variety of installations. With a profile measuring 36mm ?? 54mm and an IP20 rating, the SCILLA is suitable for indoor applications.

IP20

SPECIFICATIONS

Dimensions	1 Metre (L) x 26.4mm (W) x 54mm (H)
Input Voltage	48V
Housing Material	Aluminium
IP Rating	IP20
DALI Available	No
Dimension 1	1 Metre | 2 Metre | 3 Metre
Mounting Type	Surface Mounted | Suspended | Recessed | Plaster-In
LED Lifetime	50,000h
Warranty	5 years

DIMENSIONS

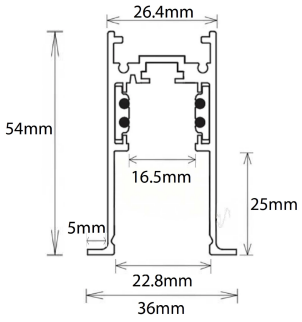

POLAR CURVE

LUMINAIRE FINISHES

Body W / B / S / R - Custom RAL

NOTES

DRK Lighting LTD
Unit 2, Silverglade Business Park,
Leatherhead Road, Chessington,
KT9 2QL

info@drklighting.co.uk
+44 (0)207 018 2202
www.drklighting.co.uk

bsi Certified Remanufacturer KITEMARK™
Citation ISO Certification ISO 9001: 2015 ISO 14001: 2015 REGISTERED
Certificate No:447672024