# Orchid

ORC-45-H-B-BR-3K-2-DA



## DESCRIPTION

The ORCHID is a compact 48V track-mounted LED spotlight, delivering an efficacy of 85lm/W with a body measuring Ø45mm × L75mm. A choice of beam angles (15°, 24°, 36°, 55°) offers flexibility for focused accent lighting and wider illumination. Available with CRI80 or CRI90, it supports a range of colour rendering requirements. DALI 2, Triac and other dimming options provide adaptable lighting control.

IP20

## SPECIFICATIONS

| | |
|---|---|
| Dimensions | ⌀ 45mm x L75mm |
| Input Voltage | 48V |
| Lumen Output | 680lm \| 765lm \| 850lm |
| LED Efficacy | 85lm/W |
| Color Rendering Index | >80 \| >90 |
| Dimming | Non-Dimmable \| Switched \| Triac \| 0 to 10V \| DALI 2 \| Bluetooth |
| Control Gear Location | Integral |
| Housing Material | Aluminium |
| IP Rating | IP20 |

## DIMENSIONS

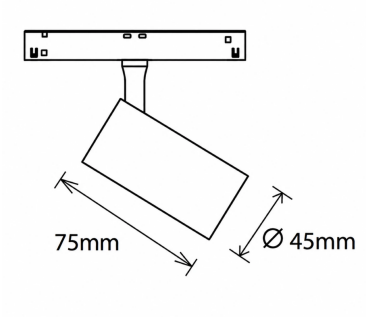


## POLAR CURVE

## LUMINAIRE FINISHES

Body W / B / S / R - Custom RAL

## NOTES

DRK Lighting LTD
Unit 2, Silverglade Business Park,
Leatherhead Road, Chessington,
KT9 2QL

info@drklighting.co.uk
+44 (0)207 018 2202
www.drklighting.co.uk

bsi Certified Remanufacturer KITEMARK™
Citation ISO Certification ISO 9001: 2015 ISO 14001: 2015 REGISTERED
Certificate No:447672024

| | |
|---|---|
| DALI Available | Yes |
| Dimension 1 | □ 45mm x L75mm |
| Mounting Type | Track Mounted |
| LED Lifetime | 50,000h |
| Warranty | 5 years |

DRK Lighting LTD
Unit 2, Silverglade Business Park,
Leatherhead Road, Chessington,
KT9 2QL

info@drklighting.co.uk
+44 (0)207 018 2202
www.drklighting.co.uk

bsi Certified Remanufacturer KITEMARK™

Citation ISO Certification
Integrated Management System
ISO 9001: 2015
ISO 14001: 2015
REGISTERED
Certificate No:447672024