Orchid

ORC-45-H-B-BR-3K-4-DA



DESCRIPTION

The ORCHID is a compact 48V track-mounted LED spotlight, delivering an efficacy of 85lm/W with a body measuring Ø45mm × L75mm. A choice of beam angles (15°, 24°, 36°, 55°) offers flexibility for focused accent lighting and wider illumination. Available with CRI80 or CRI90, it supports a range of colour rendering requirements. DALI 2, Triac and other dimming options provide adaptable lighting control.

IP20

SPECIFICATIONS

Dimensions	⌀ 45mm x L75mm
Input Voltage	48V
Lumen Output	680lm | 765lm | 850lm
LED Efficacy	85lm/W
Color Rendering Index	>80 | >90
Dimming	Non-Dimmable | Switched | Triac | 0 to 10V | DALI 2 | Bluetooth
Control Gear Location	Integral
Housing Material	Aluminium
IP Rating	IP20

DIMENSIONS

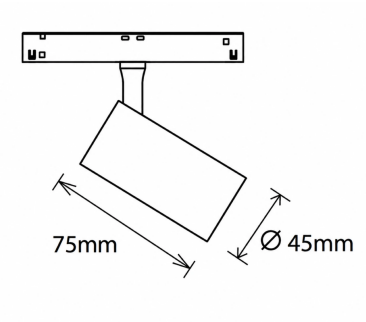

POLAR CURVE

LUMINAIRE FINISHES

Body W / B / S / R - Custom RAL

NOTES

DRK Lighting LTD
Unit 2, Silverglade Business Park,
Leatherhead Road, Chessington,
KT9 2QL

info@drklighting.co.uk
+44 (0)207 018 2202
www.drklighting.co.uk

bsi Certified Remanufacturer KITEMARK™
Citation ISO Certification ISO 9001: 2015 ISO 14001: 2015 REGISTERED
Certificate No:447672024

DALI Available	Yes
Dimension 1	□ 45mm x L75mm
Mounting Type	Track Mounted
LED Lifetime	50,000h
Warranty	5 years

DRK Lighting LTD
Unit 2, Silverglade Business Park,
Leatherhead Road, Chessington,
KT9 2QL

info@drklighting.co.uk
+44 (0)207 018 2202
www.drklighting.co.uk

bsi Certified Remanufacturer KITEMARK™

Citation ISO Certification
Integrated Management System
ISO 9001: 2015
ISO 14001: 2015
REGISTERED
Certificate No:447672024