Lupine

LUP-55-H-B-BR-4K-Z-DA



DESCRIPTION

The LUPINE is a versatile 48V track-mounted LED spotlight range, available in four sizes with an efficacy of 85lm/W. An adjustable beam angle of 20°–35° allows the light distribution to be tailored to suit a variety of accent lighting applications. DALI 2, Triac and other dimming options provide adaptable lighting control, while the coordinated family of sizes offers design flexibility across different lighting layouts.

IP20

DIMENSIONS

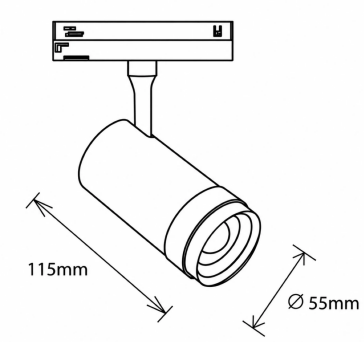

POLAR CURVE

LUMINAIRE FINISHES

DRK Lighting LTD
Unit 2, Silverglade Business Park,
Leatherhead Road, Chessington,
KT9 2QL

info@drklighting.co.uk
+44 (0)207 018 2202
www.drklighting.co.uk

bsi Certified Remanufacturer KITEMARK™
Citation ISO Certification ISO 9001: 2015 ISO 14001: 2015 REGISTERED
Certificate No:447672024

SPECIFICATIONS

Dimensions	□ 55mm x L115mm
Input Voltage	48V
Lumen Output	850lm | 935lm | 1020lm
LED Efficacy	85lm/W
Color Rendering Index	>90
Dimming	Non-Dimmable | Switched | Triac | 0 to 10V | DALI 2 | Bluetooth
Control Gear Location	Integral
Housing Material	Aluminium
IP Rating	IP20
DALI Available	Yes
Dimension 1	□ 55mm x L115mm
Mounting Type	Track Mounted
LED Lifetime	50,000h
Warranty	5 years

Body W / B / S / R - Custom RAL

NOTES

DRK Lighting LTD
Unit 2, Silverglade Business Park,
Leatherhead Road, Chessington,
KT9 2QL

info@drklighting.co.uk
+44 (0)207 018 2202
www.drklighting.co.uk

bsi Certified Remanufacturer KITEMARK™
Citation ISO Certification
Integrated Management System
ISO 9001: 2015
ISO 14001: 2015
REGISTERED
Certificate No:447672024