# Lupine

LUP-55-H-S-SR-3K-Z-TR



## DESCRIPTION

The LUPINE is a versatile 48V track-mounted LED spotlight range, available in four sizes with an efficacy of 85lm/W. An adjustable beam angle of 20°–35° allows the light distribution to be tailored to suit a variety of accent lighting applications. DALI 2, Triac and other dimming options provide adaptable lighting control, while the coordinated family of sizes offers design flexibility across different lighting layouts.

IP20

## DIMENSIONS

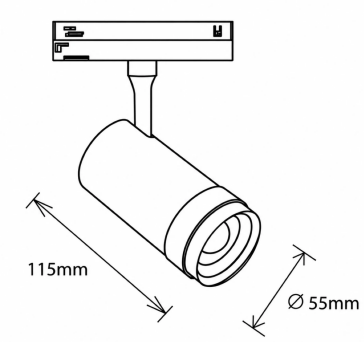


## POLAR CURVE

## LUMINAIRE FINISHES

DRK Lighting LTD
Unit 2, Silverglade Business Park,
Leatherhead Road, Chessington,
KT9 2QL

info@drklighting.co.uk
+44 (0)207 018 2202
www.drklighting.co.uk

bsi Certified Remanufacturer KITEMARK™
Citation ISO Certification ISO 9001: 2015 ISO 14001: 2015 REGISTERED
Certificate No:447672024

## SPECIFICATIONS

| | |
|---|---|
| Dimensions | □ 55mm x L115mm |
| Input Voltage | 48V |
| Lumen Output | 850lm \| 935lm \| 1020lm |
| LED Efficacy | 85lm/W |
| Color Rendering Index | >90 |
| Dimming | Non-Dimmable \| Switched \| Triac \| 0 to 10V \| DALI 2 \| Bluetooth |
| Control Gear Location | Integral |
| Housing Material | Aluminium |
| IP Rating | IP20 |
| DALI Available | Yes |
| Dimension 1 | □ 55mm x L115mm |
| Mounting Type | Track Mounted |
| LED Lifetime | 50,000h |
| Warranty | 5 years |

Body W / B / S / R - Custom RAL

## NOTES

DRK Lighting LTD
Unit 2, Silverglade Business Park,
Leatherhead Road, Chessington,
KT9 2QL

info@drklighting.co.uk
+44 (0)207 018 2202
www.drklighting.co.uk

bsi Certified Remanufacturer KITEMARK™
Citation ISO Certification
Integrated Management System
ISO 9001: 2015
ISO 14001: 2015
REGISTERED
Certificate No:447672024