# Pentas

PEN-UD-1000-W-SM



## DESCRIPTION

The PENTAS is a 48V direct/indirect lighting track with an aluminium housing measuring 26.4mm ?? 77.5mm. Available surface mounted or suspended, in standard lengths of 1m, 1.5m, 2m and 3m, with other lengths available, it offers flexibility for a variety of lighting layouts.

IP20

DRK Lighting LTD
Unit 2, Silverglade Business Park,
Leatherhead Road, Chessington,
KT9 2QL

info@drklighting.co.uk
+44 (0)207 018 2202
www.drklighting.co.uk

bsi Certified Remanufacturer KITEMARK™

Citation ISO Certification
Integrated Management System
ISO 9001: 2015
ISO 14001: 2015
REGISTERED
Certificate No:447672024

## SPECIFICATIONS

| | |
|---|---|
| Dimensions | 1 Metre (L) x 26.4mm (W) x 77.5mm (H) |
| Input Voltage | 48V |
| Housing Material | Aluminium |
| IP Rating | IP20 |
| DALI Available | No |
| Dimension 1 | 1 Metre \| 2 Metre \| 3 Metre |
| Mounting Type | Surface Mounted \| Suspended \| Recessed \| Plaster-In |
| LED Lifetime | 50,000h |
| Warranty | 5 years |

## DIMENSIONS

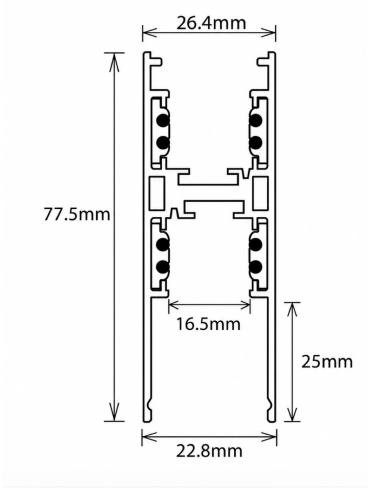


## POLAR CURVE

## LUMINAIRE FINISHES

Body W / B / S / R - Custom RAL

## NOTES

DRK Lighting LTD
Unit 2, Silverglade Business Park,
Leatherhead Road, Chessington,
KT9 2QL

info@drklighting.co.uk
+44 (0)207 018 2202
www.drklighting.co.uk

bsi Certified Remanufacturer KITEMARK™
Citation ISO Certification Integrated Management System ISO 9001: 2015 ISO 14001: 2015 REGISTERED
Certificate No:447672024