Celosia

CEL-44-B-H-4K-Z-DA



DESCRIPTION

The CELOSIA is a 48V track-mounted LED spotlight featuring a zoomable 20°–35° beam angle, allowing illumination to be adjusted for different accent lighting requirements. Available in 12–15W power options with an average efficacy of 65lm/W, it offers precise control over light distribution. Standard white and black finishes are complemented by custom RAL finishes upon request, enabling the CELOSIA to coordinate with a variety of interior schemes.

IP20

DIMENSIONS

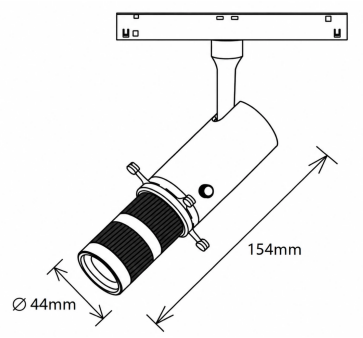

POLAR CURVE

DRK Lighting LTD
Unit 2, Silverglade Business Park,
Leatherhead Road, Chessington,
KT9 2QL

info@drklighting.co.uk
+44 (0)207 018 2202
www.drklighting.co.uk

bsi Certified Remanufacturer KITEMARK™
Citation ISO Certification
ISO 9001: 2015
ISO 14001: 2015
REGISTERED
Certificate No:447672024

SPECIFICATIONS

Dimensions	□ 44mm x L154mm
Input Voltage	48V
Lumen Output	780lm | 845lm | 910lm | 975lm
LED Efficacy	65lm/W
Color Rendering Index	>80 | >90
Dimming	Non-Dimmable | Switched | Triac | 0 to 10V | DALI 2 | Bluetooth
Control Gear Location	Integral
Housing Material	Aluminium
IP Rating	IP20
Dimension 1	□ 44mm x L154mm
Mounting Type	48V Track Mounted
LED Lifetime	50,000h
Warranty	5 years

LUMINAIRE FINISHES

Body W / B / S / R - Custom RAL

NOTES

Zoomable 20°–35° beam angle

DRK Lighting LTD
Unit 2, Silverglade Business Park,
Leatherhead Road, Chessington,
KT9 2QL

info@drklighting.co.uk
+44 (0)207 018 2202
www.drklighting.co.uk

bsi Certified Remanufacturer KITEMARK™

Citation ISO Certification
Integrated Management System
ISO 9001: 2015
ISO 14001: 2015
REGISTERED
Certificate No:447672024