Lotus

LOT-64-H-B-BR-3K-4-DA



DESCRIPTION

The LOTUS is a versatile LED spotlight range available in four sizes, offering an LED efficacy of 130lm/W for efficient illumination. With multiple beam angles (24°, 36°, 60°) and glare control achieving UGR<22, it provides flexibility for a variety of lighting applications. Suitable for DALI 2 and Triac dimming, the LOTUS supports adaptable lighting control, while its IP20 rating makes it suitable for indoor use. Available with a honeycomb louvre.

IP20

DIMENSIONS

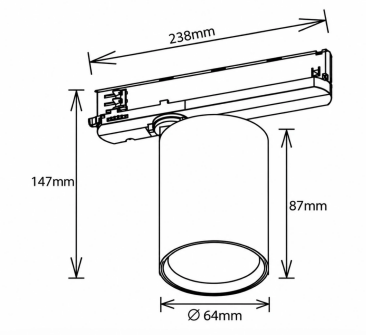

POLAR CURVE

LUMINAIRE FINISHES

DRK Lighting LTD
Unit 2, Silverglade Business Park,
Leatherhead Road, Chessington,
KT9 2QL

info@drklighting.co.uk
+44 (0)207 018 2202
www.drklighting.co.uk

bsi Certified Remanufacturer KITEMARK™
Citation ISO Certification
Integrated Management System
ISO 9001: 2015
ISO 14001: 2015
REGISTERED
Certificate No:447672024

SPECIFICATIONS

Dimensions	⌀ 64mm x L87mm
Input Voltage	AC 220-240V
Lumen Output	1300lm | 1560lm | 1950lm
LED Efficacy	130lm/W
UGR	<22
Color Rendering Index	>90
Dimming	Non-Dimmable | Switched | Triac | 0 to 10V | DALI 2 | Bluetooth
Control Gear Location	Integral
Housing Material	Aluminium
IP Rating	IP20
IK Rating	IK02
DALI Available	Yes
Dimension 1	⌀ 64mm x L87mm
Mounting Type	Track Mounted
LED Lifetime	50,000h
Warranty	5 years

Body W / B / S / R - Custom RAL

NOTES

Fully Adjustable - 350° Horizontal Rotation, 90° Vertical Rotation

DRK Lighting LTD
Unit 2, Silverglade Business Park,
Leatherhead Road, Chessington,
KT9 2QL

info@drklighting.co.uk
+44 (0)207 018 2202
www.drklighting.co.uk

bsi Certified Remanufacturer KITEMARK™
Citation ISO Certification Integrated Management System ISO 9001: 2015 ISO 14001: 2015 REGISTERED
Certificate No:447672024