Cosmos

COS-65-L-B-BR-3K-1-TR



DESCRIPTION

The COSMOS is a versatile LED spotlight range available in six sizes, delivering an efficacy of 110lm/W and CRI90 for accurate colour rendering. Fully adjustable, with 350° horizontal rotation and 90° vertical tilt, it allows precise positioning for accent and general lighting applications. A choice of beam angles (24°, 36°, 40°, 45°, 60°) provides enhanced design flexibility, while an optional honeycomb louvre offers additional glare control for improved visual comfort.

IP20

DIMENSIONS

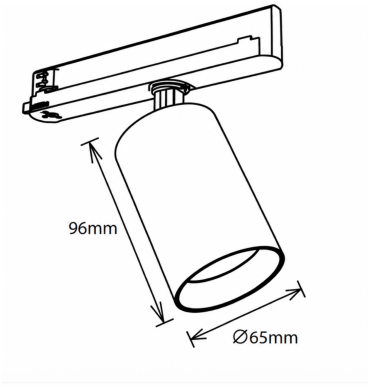

POLAR CURVE

LUMINAIRE FINISHES

Body W / B / S / R - Custom RAL

NOTES

DRK Lighting LTD
Unit 2, Silverglade Business Park,
Leatherhead Road, Chessington,
KT9 2QL

info@drklighting.co.uk
+44 (0)207 018 2202
www.drklighting.co.uk

bsi Certified Remanufacturer KITEMARK™
Citation ISO Certification ISO 9001: 2015 ISO 14001: 2015 REGISTERED
Certificate No:447672024

SPECIFICATIONS

Dimensions	□ 65mm x L96mm
Input Voltage	AC 220-240V
Lumen Output	1100lm | 1650lm
LED Efficacy	110lm/W
Color Rendering Index	>80 | >90
Dimming	Non-Dimmable | Switched | Triac | 0 to 10V | DALI 2 | Bluetooth
Control Gear Location	Integral
Housing Material	Aluminium
IP Rating	IP20
DALI Available	Yes
Dimension 1	□ 65mm x L96mm
Mounting Type	Track Mounted
LED Lifetime	50,000h
Warranty	5 years

Fully Adjustable - 350° Horizontal Rotation, 90° Vertical Rotation. Optional Honeycomb Louvre (Add /HC to code)

DRK Lighting LTD
Unit 2, Silverglade Business Park,
Leatherhead Road, Chessington,
KT9 2QL

info@drklighting.co.uk
+44 (0)207 018 2202
www.drklighting.co.uk

bsi Certified Remanufacturer KITEMARK™
Citation ISO Certification Integrated Management System ISO 9001: 2015 ISO 14001: 2015 REGISTERED
Certificate No:447672024