Oxalis

OXL-2000-S-SM

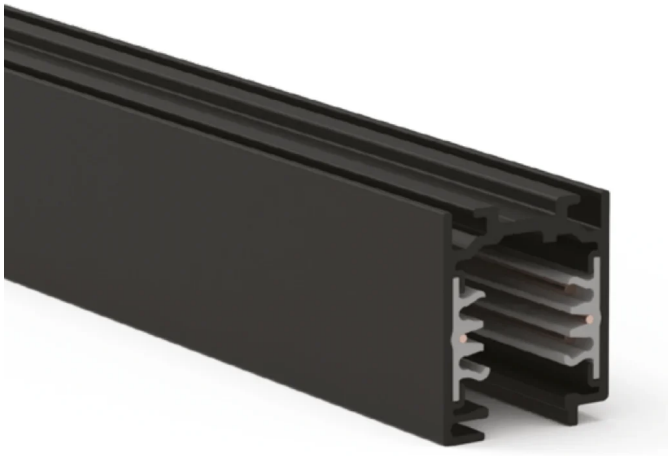

DESCRIPTION

The OXALIS is a versatile 240V lighting track for surface mounting or suspension with an optional suspension kit. Available in standard lengths of 1m, 1.5m, 2m and 3m, with other lengths available, it offers flexibility for a variety of lighting layouts. With a compact profile measuring W31.4mm ?? H37.8mm and an IP20 rating, the OXALIS provides a streamlined track solution for indoor applications.

IP20

SPECIFICATIONS

Dimensions	2 Metre (L) x 31.4mm (W) x 37.8mm (H)
Input Voltage	AC 220-240V
Housing Material	Aluminium
IP Rating	IP20
DALI Available	No
Dimension 1	1 Metre | 2 Metre | 3 Metre
Mounting Type	Surface Mounted
LED Lifetime	50,000h
Warranty	5 years

DIMENSIONS

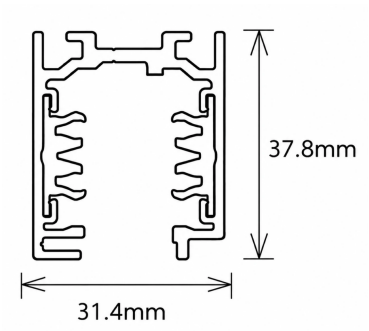

POLAR CURVE

LUMINAIRE FINISHES

Body W / B / S / R - Custom RAL

NOTES

DRK Lighting LTD
Unit 2, Silverglade Business Park,
Leatherhead Road, Chessington,
KT9 2QL

info@drklighting.co.uk
+44 (0)207 018 2202
www.drklighting.co.uk

bsi Certified Remanufacturer KITEMARK™
Citation ISO Certification ISO 9001: 2015 ISO 14001: 2015 REGISTERED
Certificate No:447672024