# Excelsior62

EXC62HEO-B-H-3K-ND-SM-1500



## DESCRIPTION

The EXCELSIOR62 range combines architectural versatility with high efficacy, offering opal or microprismatic diffusers with performance of 130lm/W and 110lm/W respectively. Available in direct-only or direct/indirect configurations, it supports a variety of lighting schemes with surface-mounted or suspended installation. Standard lengths of 1m, 1.5m, 2m and 3m are complemented by custom lengths upon request, allowing the range to follow the geometry of your space. Various finishes and integral emergency options complete an adaptable linear lighting solution.

IP20

## SPECIFICATIONS

| | |
|---|---|
| Dimensions | 1500mm (L) x 62mm (W) x 75mm (H) |
| Input Voltage | AC 220-240V |
| Lumen Output | 12W/m, 1560lm/m \| 18W/m, 2340lm/m \| 24W/m, 3120lm/m \| 36W/m, 4680lm/m |
| LED Efficacy | 110lm/W (Delivered) |
| Dimming | Switched \| Triac \| DALI 2 |
| Control Gear Location | Integral |
| Housing Material | Aluminium |
| IP Rating | IP20 |
| DALI Available | Yes |

## DIMENSIONS

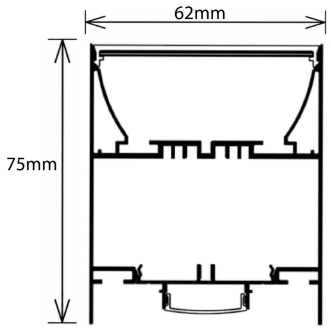


## POLAR CURVE

## LUMINAIRE FINISHES

Body W / B / S / R - Custom RAL

## NOTES

DRK Lighting LTD
Unit 2, Silverglade Business Park,
Leatherhead Road, Chessington,
KT9 2QL

info@drklighting.co.uk
+44 (0)207 018 2202
www.drklighting.co.uk

bsi Certified Remanufacturer KITEMARK™
Citation ISO Certification ISO 9001: 2015 ISO 14001: 2015 REGISTERED
Certificate No:447672024

| | |
|---|---|
| Dimension 1 | 1000mm (L) x 62mm (W) x 75mm (H) \| 1500mm (L) x 62mm (W) x 75mm (H) \| 2000mm (L) x 62mm (W) x 75mm (H) \| 3000mm (L) x 62mm (W) x 75mm (H) |
| Mounting Type | Surface Mounted \| Suspended |
| LED Lifetime | 50,000h |
| Warranty | 5 years |

DRK Lighting LTD
Unit 2, Silverglade Business Park,
Leatherhead Road, Chessington,
KT9 2QL

info@drklighting.co.uk
+44 (0)207 018 2202
www.drklighting.co.uk

bsi Certified Remanufacturer KITEMARK™
Citation ISO Certification
Integrated Management System
ISO 9001: 2015
ISO 14001: 2015
REGISTERED
Certificate No:447672024