Excelsior52

EXC52-UGR-B-BR-H-3K-1-DA-REC-846

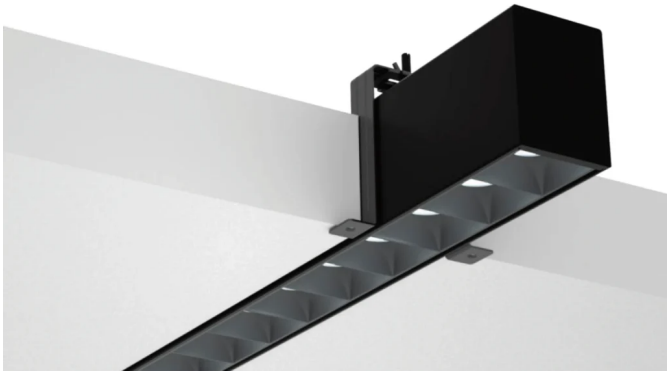

DESCRIPTION

The EXCELSIOR-52 range combines architectural versatility with low-glare performance, achieving UGR<16 and an efficacy of 95lm/W. Available for surface-mounted, suspended or recessed installation, it offers 12° and 24° beam angles for precise, focused illumination. Five fixed lengths support the range's UGR performance, with standard power options of 22W/m and 30W/m and other options available upon request.

IP20

SPECIFICATIONS

Dimensions	846mm (L) x52mm (W) x 70mm (H)
Input Voltage	AC 220-240V
Lumen Output	30W/m, 2850lm/m
LED Efficacy	95lm/W
UGR	UGR<16
Dimming	Switched | Triac | DALI 2
Control Gear Location	Integral
Housing Material	Aluminium
IP Rating	IP20
IK Rating	IK10

DIMENSIONS

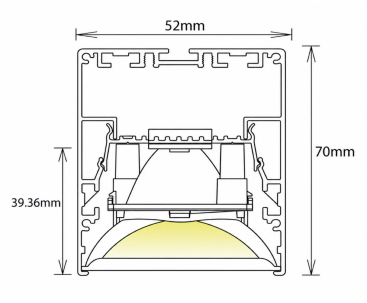

POLAR CURVE

LUMINAIRE FINISHES

Body W / B / S / R - Custom RAL

NOTES

DRK Lighting LTD
Unit 2, Silverglade Business Park,
Leatherhead Road, Chessington,
KT9 2QL

info@drklighting.co.uk
+44 (0)207 018 2202
www.drklighting.co.uk

bsi Certified Remanufacturer KITEMARK™
Citation ISO Certification ISO 9001: 2015 ISO 14001: 2015 REGISTERED
Certificate No:447672024

DALI Available	Yes
Dimension 1	564mmmm (L) x 52mm (W) x 70mm (H) | 846mm (L) x 52mm (W) x 70mm (H) | 1128mm (L) x 52mm (W) x 70mm (H) | 1410mm (L) x 52mm (W) x 70mm (H) | 1692mm (L) x 52mm (W) x 70mm (H)
Mounting Type	Surface Mounted | Suspended | Recessed
LED Lifetime	50,000h
Warranty	5 years

DRK Lighting LTD
Unit 2, Silverglade Business Park,
Leatherhead Road, Chessington,
KT9 2QL

info@drklighting.co.uk
+44 (0)207 018 2202
www.drklighting.co.uk

bsi Certified Remanufacturer KITEMARK™
Citation ISO Certification
Integrated Management System
ISO 9001: 2015
ISO 14001: 2015
REGISTERED
Certificate No:447672024