Excelsior62-Up-Down

EXC62HEO-UD-B-H-4K-DA-SM-1000



DESCRIPTION

The EXCELSIOR-62 range combines architectural versatility with high efficacy, offering opal or microprismatic diffusers with performance of 130lm/W and 110lm/W respectively. Available in direct-only or direct/indirect configurations, it supports a variety of lighting schemes with surface-mounted or suspended installation. Standard lengths of 1m, 1.5m, 2m and 3m are complemented by custom lengths upon request, allowing the range to follow the geometry of your space. Various finishes and integral emergency options complete an adaptable linear lighting solution.

IP20

SPECIFICATIONS

Dimensions	1000mm (L) x 62mm (W) x 75mm (H)
Input Voltage	AC 220-240V
Lumen Output	Opal - 12W/m, 1560lm/m (Direct - 6W/m, 780lm/m, Indirect - 6W/m, 780lm/m) | 24W/m, 3120lm/m (Direct - 18W/m, 2340lm/m, Indirect - 6W/m, 780lm/m) | 36W/m, 4680lm/m (Direct - 24W/m, 3120lm/m, Indirect - 12W/m, 1560lm/m) | 42W/m, 5460lm/m (Direct - 24W/m, 3120lm/m, Indirect - 18W/m, 2340lm/m) Microprism -12W/m, 1284lm/m (Direct - 6W/m, 642lm/m, Indirect - 6W/m, 642lm/m) | 24W/m, 2569lm/m (Direct - 18W/m, 1926lm/m, Indirect - 6W/m, 642lm/m) | 36W/m, 3852lm/m (Direct - 24W/m, 2569lm/m, Indirect - 12W/m, 1284lm/m) | 42W/m, 4494lm/m (Direct - 24W/m, 2569lm/m, Indirect - 18W/m, 1926lm/m)

DIMENSIONS

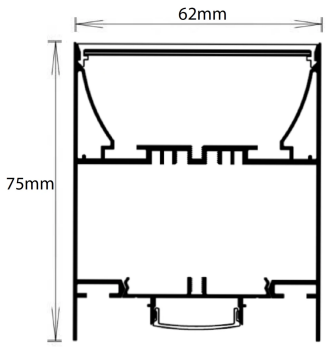

POLAR CURVE

LUMINAIRE FINISHES

Body W / B / S / R - Custom RAL

NOTES

DRK Lighting LTD
Unit 2, Silverglade Business Park,
Leatherhead Road, Chessington,
KT9 2QL

info@drklighting.co.uk
+44 (0)207 018 2202
www.drklighting.co.uk

bsi Certified Remanufacturer KITEMARK™
Citation ISO Certification ISO 9001: 2015 ISO 14001: 2015 REGISTERED
Certificate No:447672024

LED Efficacy	Opal - 130lm/W (Delivered) Microprism - 107lm/W (Delivered)
Color Rendering Index	>90
Dimming	Non-Dimmable | Switched | Triac | 0 to 10V | DALI 2 | Bluetooth
Control Gear Location	Integral
Housing Material	Aluminium
IP Rating	IP20
Dimension 1	1000mm (L) x 62mm (W) x 75mm (H) | 1500mm (L) x 62mm (W) x 75mm (H) | 2000mm (L) x 62mm (W) x 75mm (H) | 3000mm (L) x 62mm (W) x 75mm (H) | Custom Lengths
Mounting Type	Surface Mounted | Suspended
LED Lifetime	50,000h
Warranty	5 years

DRK Lighting LTD
Unit 2, Silverglade Business Park,
Leatherhead Road, Chessington,
KT9 2QL

info@drklighting.co.uk
+44 (0)207 018 2202
www.drklighting.co.uk

bsi Certified Remanufacturer KITEMARK™
Citation ISO Certification
Integrated Management System
ISO 9001: 2015
ISO 14001: 2015
REGISTERED
Certificate No:447672024