Aras

ARA-110-B-H-3K-1-ND-SM



DESCRIPTION

Designed for performance and versatility, the ARAS can downlight combines clean aesthetics with high efficiency. Available in multiple sizes with a range of reflector options and finishes, it offers design flexibility while achieving an efficacy of up to 110lm/W. A choice of beam angles (20°, 45°, 60°) allows for focused accent lighting or wider illumination to suit the application. Integral emergency is available for some sizes.

DRK Lighting LTD
Unit 2, Silverglade Business Park,
Leatherhead Road, Chessington,
KT9 2QL

info@drklighting.co.uk
+44 (0)207 018 2202
www.drklighting.co.uk

Certificate No:447672024

SPECIFICATIONS

Dimensions	⌀ 110mm x H 120mm
Input Voltage	AC 220-240V
Lumen Output	1500lm
LED Efficacy	100lm/W
Color Rendering Index	>90
Dimming	Non-Dimmable | Switched | Triac | 0 to 10V | DALI 2 | Bluetooth
Control Gear Location	Integral
Emergency Gear Location	Remote
Housing Material	Aluminium
IP Rating	IP20
DALI Available	Yes
Dimension 1	⌀ 110mm (Dia) x 120mm (H)
Mounting Type	Surface Mounted | Suspended
LED Lifetime	50,000h
Warranty	5 years

DIMENSIONS

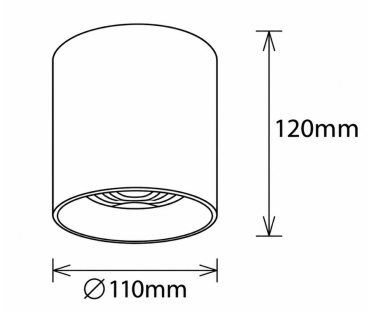

POLAR CURVE

LUMINAIRE FINISHES

Body W / B / S / R - Custom RAL

NOTES

Chrome Reflector as Standard. Custom Reflector Available Upon Request

DRK Lighting LTD
Unit 2, Silverglade Business Park,
Leatherhead Road, Chessington,
KT9 2QL

info@drklighting.co.uk
+44 (0)207 018 2202
www.drklighting.co.uk

bsi Certified Remanufacturer KITEMARK™
Citation ISO Certification Integrated Management System ISO 9001: 2015 ISO 14001: 2015 REGISTERED
Certificate No:447672024