Aras

ARA-110-B-H-3K-1-DA-SM



DESCRIPTION

Designed for performance and versatility, the ARAS can downlight combines clean aesthetics with high efficiency. Available in multiple sizes with a range of reflector options and finishes, it offers design flexibility while achieving an efficacy of up to 110lm/W. A choice of beam angles (20°, 45°, 60°) allows for focused accent lighting or wider illumination to suit the application. Integral emergency is available for some sizes.

UKCA CE RoHS IP20 DALI 2

DRK Lighting LTD
Unit 2, Silverglade Business Park,
Leatherhead Road, Chessington,
KT9 2QL

info@drklighting.co.uk
+44 (0)207 018 2202
www.drklighting.co.uk

bsi Certified Remanufacturer KITEMARK™
Citation ISO Certification ISO 9001: 2015 ISO 14001: 2015 REGISTERED
Certificate No:447672024

SPECIFICATIONS

Dimensions	⌀ 110mm x H 120mm
Input Voltage	AC 220-240V
Lumen Output	1500lm
LED Efficacy	100lm/W
Color Rendering Index	>90
Dimming	Non-Dimmable | Switched | Triac | 0 to 10V | DALI 2 | Bluetooth
Control Gear Location	Integral
Emergency Gear Location	Remote
Housing Material	Aluminium
IP Rating	IP20
DALI Available	Yes
Dimension 1	⌀ 110mm (Dia) x 120mm (H)
Mounting Type	Surface Mounted | Suspended
LED Lifetime	50,000h
Warranty	5 years

DIMENSIONS

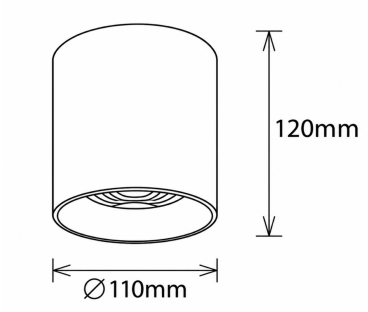

POLAR CURVE

LUMINAIRE FINISHES

Body W / B / S / R - Custom RAL

NOTES

Chrome Reflector as Standard. Custom Reflector Available Upon Request

DRK Lighting LTD
Unit 2, Silverglade Business Park,
Leatherhead Road, Chessington,
KT9 2QL

info@drklighting.co.uk
+44 (0)207 018 2202
www.drklighting.co.uk

bsi Certified Remanufacturer KITEMARK™
Citation ISO Certification Integrated Management System ISO 9001: 2015 ISO 14001: 2015 REGISTERED
Certificate No:447672024