# Chari

CHA-115-B-H-3K-1-DA-SM



## DESCRIPTION

The CHARI is a versatile can downlight range, delivering an efficacy of 110lm/W and CRI90 for accurate colour rendering. Available in six sizes for surface-mounted or suspended installation, it offers design flexibility across a variety of lighting layouts. Rated IP20 for indoor use, the CHARI is also available with integral emergency options in selected sizes.

DRK Lighting LTD
Unit 2, Silverglade Business Park,
Leatherhead Road, Chessington,
KT9 2QL

info@drklighting.co.uk
+44 (0)207 018 2202
www.drklighting.co.uk

Certificate No:447672024

## SPECIFICATIONS

| | |
|---|---|
| Dimensions | ⌀ 115mm x H 135mm |
| Input Voltage | AC 220-240V |
| Lumen Output | 3300lm |
| LED Efficacy | 110lm/W |
| Color Rendering Index | >90 |
| Dimming | Non-Dimmable \| Switched \| Triac \| 0 to 10V \| DALI 2 \| Bluetooth |
| Control Gear Location | Integral |
| Emergency Gear Location | Remote |
| Housing Material | Aluminium |
| IP Rating | IP20 |
| DALI Available | Yes |
| Dimension 1 | ⌀ 115mm x H 135mm |
| Mounting Type | Surface Mounted \| Suspended |
| LED Lifetime | 50,000h |
| Warranty | 5 years |

## DIMENSIONS

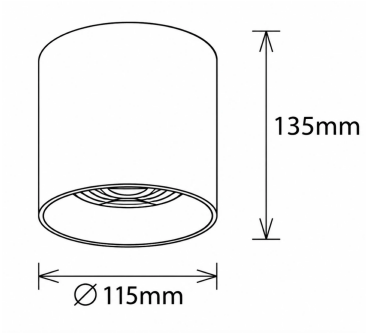


## POLAR CURVE

## LUMINAIRE FINISHES

Body W / B / S / R - Custom RAL

## NOTES

Chrome Reflector as Standard. Custom Reflector Available Upon Request

DRK Lighting LTD
Unit 2, Silverglade Business Park,
Leatherhead Road, Chessington,
KT9 2QL

info@drklighting.co.uk
+44 (0)207 018 2202
www.drklighting.co.uk

bsi Certified Remanufacturer KITEMARK™
Citation ISO Certification
Integrated Management System
ISO 9001: 2015
ISO 14001: 2015
REGISTERED
Certificate No:447672024