# Zeya

ZEY-115-B-BR-H-3K-2-ND-SUS



## DESCRIPTION

The ZEYA can downlight combines an efficacy of 105lm/W with CRI90 for accurate colour rendering. Available in six sizes for surface-mounted or suspended installation, it offers a coordinated solution for a variety of lighting layouts. A choice of beam angles (15°, 24°, 36°, 60°) allows for focused accent lighting or wider illumination to suit the application, with integral emergency options available in selected sizes.

## DIMENSIONS

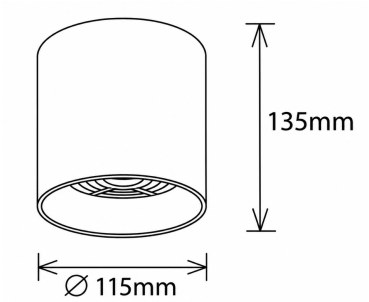


## POLAR CURVE

## LUMINAIRE FINISHES

DRK Lighting LTD
Unit 2, Silverglade Business Park,
Leatherhead Road, Chessington,
KT9 2QL

info@drklighting.co.uk
+44 (0)207 018 2202
www.drklighting.co.uk

Certificate No:447672024

## SPECIFICATIONS

| | |
|---|---|
| Dimensions | □ 115mm x H 135mm |
| Input Voltage | AC 220-240V |
| Lumen Output | 2300lm |
| LED Efficacy | 115lm/W |
| Color Rendering Index | >90 |
| Dimming | Non-Dimmable \| Switched \| Triac \| 0 to 10V \| DALI 2 \| Bluetooth |
| Control Gear Location | Integral |
| Emergency Gear Location | Remote |
| Housing Material | Aluminium |
| IP Rating | IP20 |
| DALI Available | Yes |
| Dimension 1 | □ 115mm x H 135mm |
| Mounting Type | Surface Mounted \| Suspended |
| LED Lifetime | 50,000h |
| Warranty | 5 years |

Body W / B / S / R - Custom RAL

## NOTES

DRK Lighting LTD
Unit 2, Silverglade Business Park,
Leatherhead Road, Chessington,
KT9 2QL

info@drklighting.co.uk
+44 (0)207 018 2202
www.drklighting.co.uk

bsi Certified Remanufacturer KITEMARK™

Citation ISO Certification
Integrated Management System
ISO 9001: 2015
ISO 14001: 2015
REGISTERED
Certificate No:447672024