Zeya

ZEY-115-B-BR-H-3K-2-DA-SUS



DESCRIPTION

The ZEYA can downlight combines an efficacy of 105lm/W with CRI90 for accurate colour rendering. Available in six sizes for surface-mounted or suspended installation, it offers a coordinated solution for a variety of lighting layouts. A choice of beam angles (15°, 24°, 36°, 60°) allows for focused accent lighting or wider illumination to suit the application, with integral emergency options available in selected sizes.

DIMENSIONS

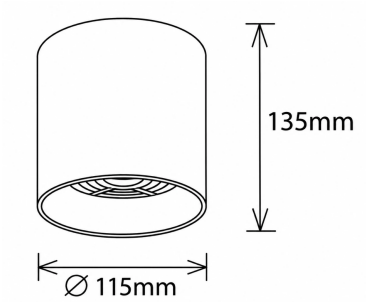

POLAR CURVE

LUMINAIRE FINISHES

DRK Lighting LTD
Unit 2, Silverglade Business Park,
Leatherhead Road, Chessington,
KT9 2QL

info@drklighting.co.uk
+44 (0)207 018 2202
www.drklighting.co.uk

Certificate No:447672024

SPECIFICATIONS

Dimensions	□ 115mm x H 135mm
Input Voltage	AC 220-240V
Lumen Output	2300lm
LED Efficacy	115lm/W
Color Rendering Index	>90
Dimming	Non-Dimmable | Switched | Triac | 0 to 10V | DALI 2 | Bluetooth
Control Gear Location	Integral
Emergency Gear Location	Remote
Housing Material	Aluminium
IP Rating	IP20
DALI Available	Yes
Dimension 1	□ 115mm x H 135mm
Mounting Type	Surface Mounted | Suspended
LED Lifetime	50,000h
Warranty	5 years

Body W / B / S / R - Custom RAL

NOTES

DRK Lighting LTD
Unit 2, Silverglade Business Park,
Leatherhead Road, Chessington,
KT9 2QL

info@drklighting.co.uk
+44 (0)207 018 2202
www.drklighting.co.uk

bsi Certified Remanufacturer KITEMARK™

Citation ISO Certification
Integrated Management System
ISO 9001: 2015
ISO 14001: 2015
REGISTERED
Certificate No:447672024