Aral

ARL-35-S-SR-H-4K-1-DA



DESCRIPTION

ARAL is a compact, high-performance LED downlight available in 3W, 5W, and 7W options, ideal for applications requiring efficient low-power illumination. Featuring a high-lumen COB chip and high reflectance lens, it delivers excellent luminous efficiency and consistent light output. A deep lens anti-glare design effectively reduces glare which can achieve UGR<19, ensuring comfortable and controlled illumination. Constructed from durable AL6063 aluminium, the housing provides outstanding heat dissipation for long-term reliability.

DIMENSIONS

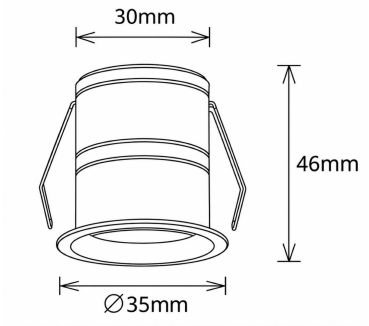

POLAR CURVE

LUMINAIRE FINISHES

DRK Lighting LTD
Unit 2, Silverglade Business Park,
Leatherhead Road, Chessington,
KT9 2QL

info@drklighting.co.uk
+44 (0)207 018 2202
www.drklighting.co.uk

Certificate No:447672024

SPECIFICATIONS

Dimensions	⌀ 35mm x H46mm
Input Voltage	AC 220-240V
Lumen Output	170lm
LED Efficacy	57lm/W
Color Rendering Index	>80
Dimming	Non-Dimmable | Switched | Triac | 0 to 10V | DALI 2 | Bluetooth
Control Gear Location	Remote
Emergency Gear Location	Remote
Housing Material	Aluminium
IP Rating	IP54
DALI Available	Yes
Dimension 1	⌀ 35mm x H46mm
Cut Out	Ø30mm
Mounting Type	Recessed
LED Lifetime	50,000h
Warranty	5 years

Body W / B / S / R - Custom RAL

NOTES

DRK Lighting LTD
Unit 2, Silverglade Business Park,
Leatherhead Road, Chessington,
KT9 2QL

info@drklighting.co.uk
+44 (0)207 018 2202
www.drklighting.co.uk

bsi Certified Remanufacturer KITEMARK™

Citation ISO Certification
Integrated Management System
ISO 9001: 2015
ISO 14001: 2015
REGISTERED
Certificate No:447672024