Lana

LAN-35-S-SR-H-4K-1-DA



DESCRIPTION

The LANA is a compact mini LED downlight range, available in three diameters: 35mm, 45mm and 55mm. Offering glare control capable of achieving UGR<19, it combines discreet proportions with visual comfort. A choice of CRI80 or CRI90 supports different colour rendering requirements, while DALI 2, Triac and other dimming options provide adaptable lighting control. Rated IP20, the LANA is suitable for indoor applications.

DIMENSIONS

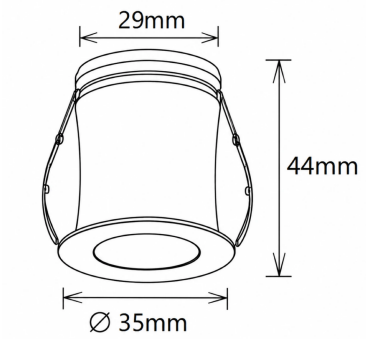

POLAR CURVE

LUMINAIRE FINISHES

Body W / B / S / R - Custom RAL

DRK Lighting LTD
Unit 2, Silverglade Business Park,
Leatherhead Road, Chessington,
KT9 2QL

info@drklighting.co.uk
+44 (0)207 018 2202
www.drklighting.co.uk

Certificate No:447672024

SPECIFICATIONS

Dimensions	□ 35mm x H44mm
Input Voltage	AC 220-240V
Lumen Output	170lm
LED Efficacy	57lm/W
UGR	UGR<19
Color Rendering Index	>80
Dimming	Non-Dimmable | Switched | Triac | 0 to 10V | DALI 2 | Bluetooth
Control Gear Location	Remote
Emergency Gear Location	Remote
Housing Material	Aluminium
IP Rating	IP20
IK Rating	IK03
DALI Available	Yes
Dimension 1	□ 35mm x H44mm
Cut Out	Ø30mm
Mounting Type	Recessed
LED Lifetime	50,000h
Warranty	5 years

NOTES

DRK Lighting LTD
Unit 2, Silverglade Business Park,
Leatherhead Road, Chessington,
KT9 2QL

info@drklighting.co.uk
+44 (0)207 018 2202
www.drklighting.co.uk

bsi Certified Remanufacturer KITEMARK™
Citation ISO Certification Integrated Management System ISO 9001: 2015 ISO 14001: 2015 REGISTERED
Certificate No:447672024