Shala

SHA-190-B-BR-H-4K-1-TR



DESCRIPTION

The SHALA is a high-performance recessed LED downlight. Delivering up to 3040lm with a CRI of <80, it ensures excellent visual comfort and color accuracy. Featuring a 60° beam distribution and various dimming capabilities, this fixture combines energy efficiency with long service life of up to 50,000 hours. Constructed from aluminium with an IP rating of IP44, it offers reliable thermal management and seamless integration into modern ceiling systems.

SPECIFICATIONS

Dimensions	□ 190mm x □ 190mm x H102mm
Input Voltage	AC 220-240V
Lumen Output	1710lm | 2090lm | 2375lm | 3040lm
LED Efficacy	95lm/W
Color Rendering Index	>80
Dimming	Non-Dimmable | Switched | Triac | 0 to 10V | DALI 2 | Bluetooth
Control Gear Location	Remote
Emergency Gear Location	Remote

DIMENSIONS

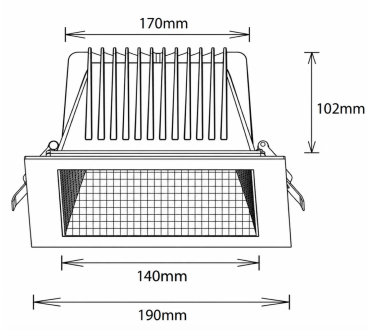

POLAR CURVE

LUMINAIRE FINISHES

Body W / B / S / R - Custom RAL

NOTES

DRK Lighting LTD
Unit 2, Silverglade Business Park,
Leatherhead Road, Chessington,
KT9 2QL

info@drklighting.co.uk
+44 (0)207 018 2202
www.drklighting.co.uk

Certificate No:447672024

Housing Material	Aluminium
IP Rating	IP40
IK Rating	IK06
DALI Available	Yes
Dimension 1	□ 190mm x □ 190mm x H102mm
Cut Out	Ø170-170mm
Mounting Type	Recessed
LED Lifetime	50,000h
Warranty	5 years

DRK Lighting LTD
Unit 2, Silverglade Business Park,
Leatherhead Road, Chessington,
KT9 2QL

info@drklighting.co.uk
+44 (0)207 018 2202
www.drklighting.co.uk

bsi Certified Remanufacturer KITEMARK™

Citation ISO Certification
Integrated Management System
ISO 9001: 2015
ISO 14001: 2015
REGISTERED
Certificate No:447672024